KOSMOS SERIE

CODE: 30727015 EDITION: 24-10-2006

INSTRUCTION MANUAL
OUTPUT OPTION RS485

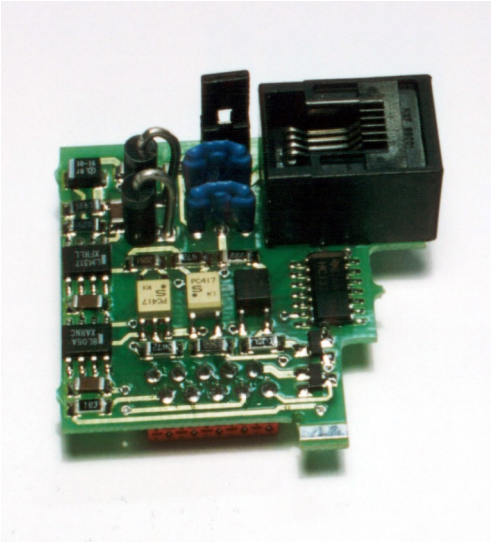

DITEL

RS4

DIGITAL PANEL METER **KOSMOS SERIES**

OUTPUT OPTI ON RS485

INDEX

1. RS485 OUTPUT OPTION

The RS485 output option consists of an additional card (reference RS4) that is installed in the M1 plug-in connector of the instrument's main board of the Alpha's, Beta's, Gamma-M o Kappa-M.
The card incorporates a 6-pin / 4-contact telephone socked with output at the rear of the meter.
The serial output permits to construct a communication line through which a master device can request to one o more KOSMOS instruments the transmission of data such de display value, setpoint values, peak, valley, tare (or offset in case of thermometers) and to perform operations such as tare of the display, reset of the peak, valley or tare memories and update setpoint values.

The BETA-M model provides also a special command that allows to copy the programming data from one meter to another of the same type.

The output option is totally software configurable as for the transmission rate (1200, 2400, 4800, 9600 ó 19200 Baud), the instrument's address (from 00 to 99), the protocol (ASCII, ISO 1745 and ModBus) and the delay applied to the meter's response time.

The RS485 option allows up to 31 DITEL instruments be connected to a master device with RS485 output.

The operating mode is half-duplex and the serial channel does only function when the instrument is in the run mode, and it normally stands in data reception mode until reception of a message, always in **slave mode**.

A valid data transmission may cause the immediate execution of an action (tare, reset of peak, valley or tare memories modification of setpoint values) or the transmission of a response from the instrument (display value, one of the setpoints value, peak, valley, tare / offset) [see Addendum 1 Page. 27-28]

From the site web www.ditel.es can be downloaded the specific software that allows to connect the KOSMOS instruments to a PC and whole programming, as well as to verify its communication's hardware.

The communications Port shall not be connected to the telephone system.

1.2. DESCRIPTION OF OPERATION

Three communication modes are provided; The ASCII mode utilizes an easy to use protocol, compatible with several models of DITEL instruments. The ISO mode, according to the ISO 1745 standard, permits a more safe communication in noisy environments since the data transfer is verified at the transmission and reception ends. In addition can be used a third protocol: MODBUS RTU (see manual on www.ditel.es)
As it can be seen in the Functions TABLE (Addendum A.1), the ASCII protocol uses 1 or 2 bytes commands depending of the command type while the ISO 1745 protocol forces the use of two bytes per command.

ASCII PROTOCOL

The Transmission format is: 1 START bit, 8 DATA bits, NO parity bit and 1 STOP bit**.**

- FORMAT of MESSAGE TO BE SENT FROM MASTER

A message sent from the master device to the instrument must be composed of the following sequence of ASCII characters:

*****	**D**	**d**	**C**	**C**	**X .....X**	**CR**

- One " * " byte [ASCII 42] of start of message.
- Two address bytes (from 00 to 99).
- One or two ASCII characters corresponding to the desired command according to the Functions TABLE (Addendum A.1).
- In case that the command request for a modification of parameters, the new value shall be transmitted with one byte of sign (+ [ASCII 43] or - [ASCII 45]) followed by a block of N ASCII characters (depending on model), including the decimal point.

FORMAT of MESSAGE FROM INSTRUMENT

The data sent from the instrument as a response to a data request type command from the master device is the following:

SP	**X .....X**	**CR**

- One byte of blank space [ASCII 32].
- One text (requested values) consisting of a byte of sign (+ [ASCII 43] or - [ASCII 45]) followed by a block of N ASCII characters (depending on model) including the decimal point.
- One " CR " byte [ASCII 13] of end of message.

- If the command belongs to "orders" or "changing parameters", the instruments gives no response.

Some commands examples
(See tables on pages. 27-28 With the commands for every model)

COMMAND		FUNCTION	Type function
ASCII	ISO		
V	ØV	Transmission of valley value	Trans.
P	ØP	Transmission of peak value	
T	ØT	Transmission of tare or offset value	
D	ØD	Transmission of display value	
L1	L1	Transmission of value of setpoint 1	
L2	L2	Transmission of value of setpoint 2	
L3	L3	Transmission of value of setpoint 3	
L4	L4	Transmission of value of setpoint 4	
X	ØX	Transmission nº batch Alpha-D	
F	ØF	Transmission of multip fact (Alpha-D)	
C	ØC	Transmission input type (Alpha-D)	
v	Øv	Reset valley memory	Orders
p	Øp	Reset peak memory	
r	Ør	Reset tare memory	
t	Øt	Tare the display	
z	Øz	Reset (Alpha-D) Reset of nº units/batch Alpha-D	
x	Øx	Reset of nº batch Alpha-D	
M1	M1	Modification value of setpoint 1	Modif.
M2	M2	Modification value of setpoint 2	
M3	M3	Modification value of setpoint 3	
M4	M4	Modification value of setpoint 4	

ISO 1745 PROTOCOL

The transmission format is: 1 START bit, 7 DATA bits, 1 EVEN PARIDAD bit and 1 STOP bit.

MESSAGE FORMAT TO BE SEND

The message format, as sent from the master device, must consist of the following sequence of characters:

SOH	D	d	STX	C	C	X.....X	ETX	BCC

- One byte S0H of start of message [ASCII 01].
- Two bytes corresponding the first to the tens and the second to the units of the instrument address number.
- One byte STX of start of text [ASCII 02].
- Two commands bytes according to the functions table.
- In case of commands that change parameters, a block of N bytes corresponding to the new value including sign and decimal point.
- One byte ETX of end of text [ASCII 03].
- One control byte BCC calculated in the following manner: Perform an exclusive-OR with all bytes between the STX (not included) and the ETX (included).
    - If the obtained byte (in ASCII format) is higher than 32, it can be taken as the BCC.
    - If the obtained byte (in ASCII format) is lower than 32, the BCC byte will be obtained by adding 32.

ISO 1745 PROTOCOL

TRANSMISSION OF DATA FROM THE INSTRUMENT

The format of a message as sent from the instrument in response to a command from the master device is the following:

1./ In case of commands that ask for transmission of a value (data request type):

S0H	**D**	**d**	**STX**	**X.....X**	**ETX**	**BCC**

- One byte S0H of start of message [ASCII 01].
- Two address bytes.
- One byte STX of start of text [ASCII 02].
- N bytes corresponding to the requested value (including the sign and decimal point).
- One byte ETX of end of text [ASCII 03].
- One control byte BCC calculated with the method described in page 5.

2./ In case of commands that do not imply the return of a value (command type or changing parameter):

D	**d**	**ACK**

ó

D	**d**	**NAK**

The instrument sends a confirmation to the master device when it receives a message.
If the message has been correctly received and interpreted, the response will consist of two address bytes and one "ACK" [ASCII 06]
If the received message has not been well interpreted or it has been detected as to have errors, the response will be two address bytes and a

Note: **If a message with the "00" address is sent, the command will be received by all the instruments, but no answer will be given. e.g. Reset of peak memory.**
It's recommended don't program any instrument with "00" address because it will never give an answer.

MODBUS PROTOCOL

To use ModBus protocol, please consult specific **MODBUS** manual on web site www.ditel.es

2. SETUP AND CONNECTIONS

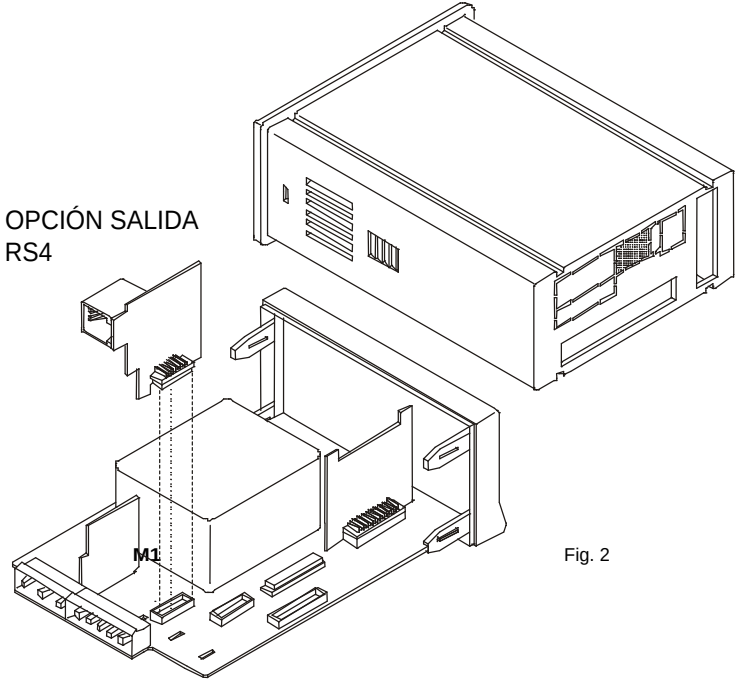

Fig. 2

2.1. INSTALLATION

Lift out the electronics assembly from the case and use a screwdriver to pull on the junctions between the case and the gray market area to detach it from the case.

The so performed orifice will allow to RS4 output board connector be brought out at the rear of the instrument.

Install the circuit board so that the lower pin fits into the corresponding main board insertion slot and push down to plug the M1 option connector in the main board M1 location.

If the instrument is to be installed in high vibrating environments, it is recommended to solder the card to the main board making use of the copper tracks on both sides of the card pin and around the main board hole on its solder side.

Before inserting the electronics in the case, you should verify that the access to the programming modules is enabled, since this is the next operation to be made after powering the unit.

2.2 CONNECTIONS

Each output card is supplied with an adhesive label that indicates the wiring connections of each option (see Fig.1). to help identifying each terminal, this label should be placed in the lower side of the meter case, beside the basic functions label as shown in Fig. 3.

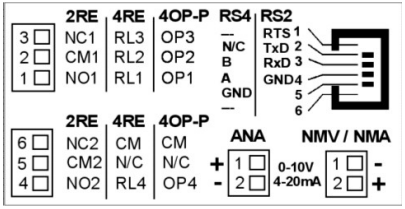

Fig. 1. Options label

CONNECTIONS CN5- RS485

PIN 6 = —
PIN 5 = GND
PIN 4 = A (-TxD / -RxD)
PIN 3 = B (+TxD / +RxD)
PIN 2 = N/C
PIN 1 = —

The communications Port shall not be connected to the telephone system.

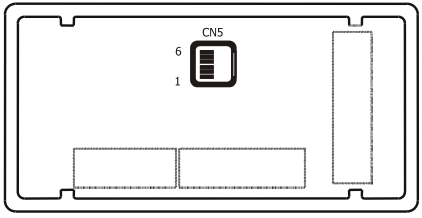

Fig. 2. Instrument's rear side with RS4 option connector.

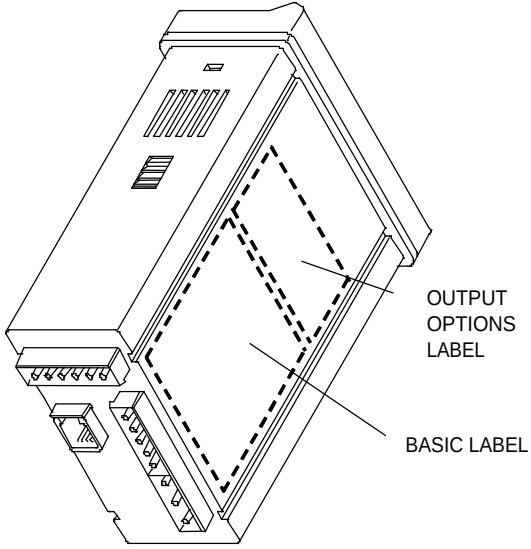

Fig. 3. Labels location

2.3 CONECTION OF SEVERAL INSTRUMENTS TO A D.T.E.

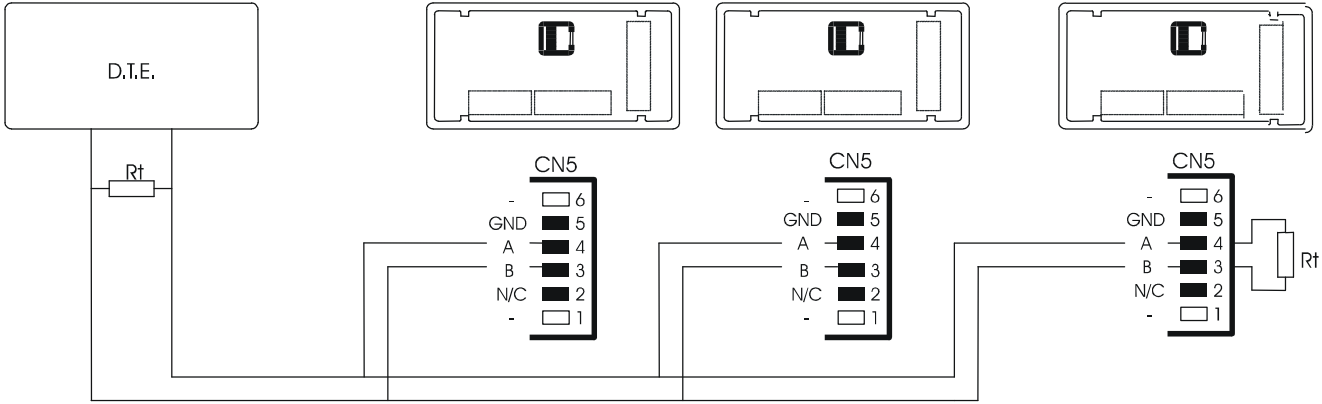

Up to 31 series COSMOS indicators can be connected on the same bus with a D.T.E. by giving each unit different address numbers from 00 to 99.
The address 00 is common to all the instruments on the line and can be used to send commands that have no response such as tare display, reset the peak, valley or tare memories or change setpoints values.
A command sent to the address 00 is executed by all the instruments simultaneously.

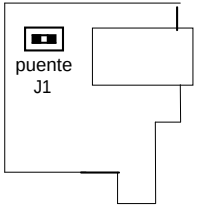

RS4

The connection of multiple instruments via the RS485 interface requires a (Rt) 120 Ohm resistor be connected at both ends of the communication line.
The KOSMOS series indicators provide the Rt resistor which is internally connected between terminals 3 y 4 of the CN5 connector by placing the jumper J1 in the output circuit of RS4 card.
Signal connections and the Rt value at the D.T.E. side may depend on the card type. It is recommended to consult the corresponding technical manual.

2.4 CONTROL OF RS232C to RS485 CONVERTER Type IC485S
Timing Diagram Signal evolution (e.g. with Protocol ASCII)

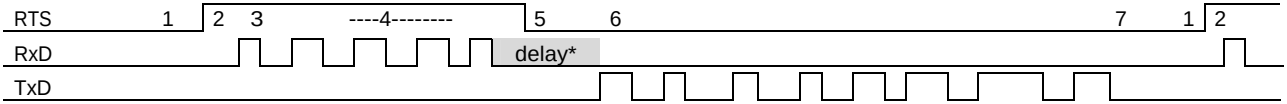

Pos.	RTS	Direction	Data	Comment
1	0	←		PC initial situation (Converter RS-485 Data-Direction PC)
2	1	→		PC starts transmission (Converter RS-485 Data-Direction instrument Ditel)
3	1	→	RxD	Start signal(*), Address(xx), Command(y), end signal (CR) sent to instrument Ditel
4	1	→		Waiting time to warranty that all buffer has been sent.
5	0	←		Change direction of converter to input data (Data Direction to PC)
6	0	←	TxD	Data stored into PC buffer PC
7	0	←		Pause

* Note:

Between points 4 and 6 Ditel instruments add a dLY (delay) indicated with label delay. Delay is between the last bit of the last byte of sent message and the first bit of the answer sent by the instrument (not related with RTS signal edge).

Beta's, Gamma-M, Kappa-M Alpha's version 1.00 or higher	Delay	1 = 30 ms	2= 60 ms	3= 100 ms	4= 300 ms	5= no delay (aprox.. 2 ms)
Alpha's previous to version 1.00	Delay	1 = 30 ms	2= 60 ms	3= 100 ms	4= 300 ms	

If there is no possibility to control de RTS signal on your PC with your software, have to use a RS232C to RS485 converter called **automatic**, available into the market.
As standard is recommended using a 30 ms delay. Although, depending on the equipment and software possibilities with families Beta's, Gamma-M, Kappa-M and new ALPHA's with version 1.00 or higher, use a delay type 5 (max 2ms)

3. RS485 OUTPUT PROGRAMMING MODELS BETA-M, BETA-D, KAPPA-M

3.1. RS485 OUTPUT MODELS BETA-M, BETA-D AND KAPPA-M CONFIGURATION DIAGRAM

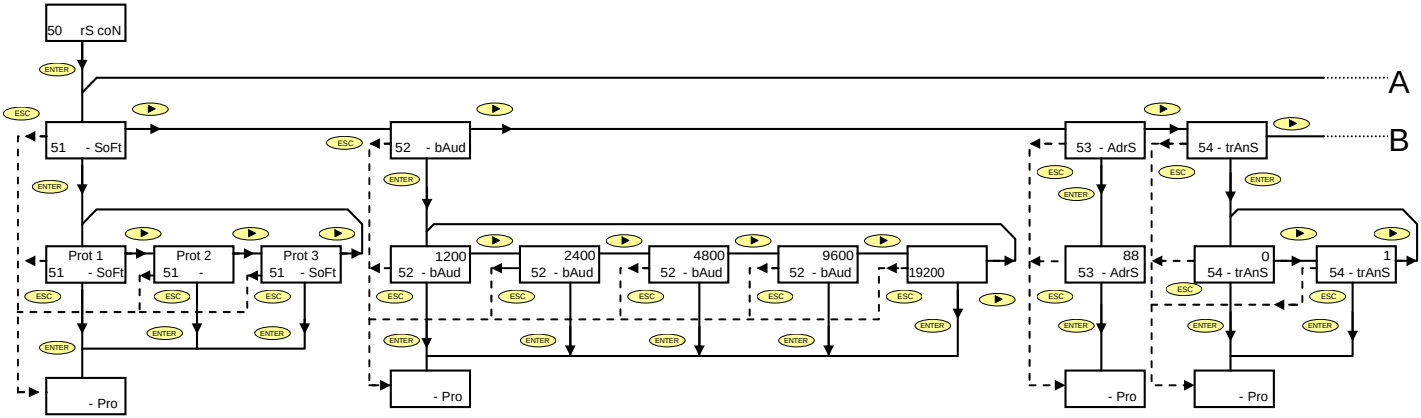

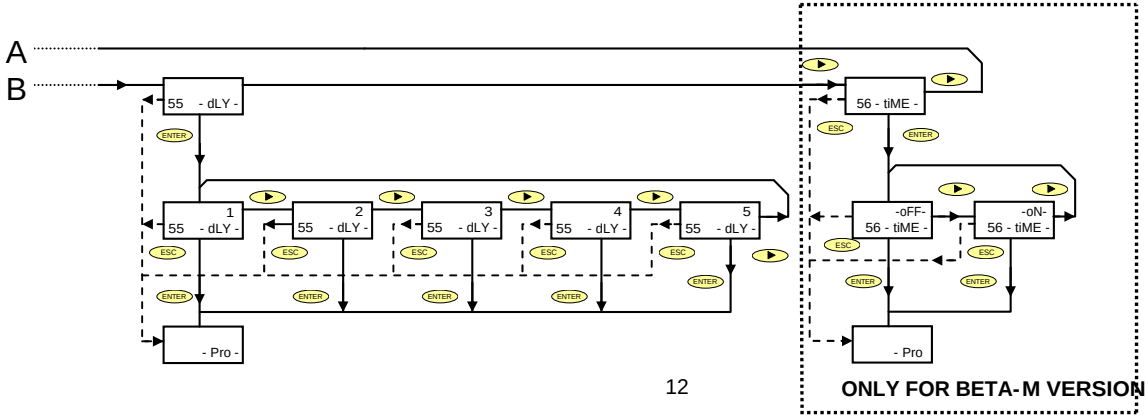

ONLY FOR BETA-M VERSION B-B

3.1 PROGRAMMING INSTRUCTIONS

The previous page figure shows the MODULE 50 for serial output configuration, valid for models BETA-M, BETA-D and KAPPA-M. The module is composed of 6 menus of independent access that allow configuration of the following parameters:

- **Menu 51 –SoFt-** Selection of the communication protocol ASCII, ISO 1745 and MODBUS.
- **Menu 52 –bAud-** Configuration of Baud rate transmission.
- **Menu 52 –AdrS-** Programming instrument address.
- **Menu 54 –trAnS-** Validation or inhibition of Send command. This command, if validated, permits to copy the configuration of one BETA-M to another BETA-M, **(only valid for BETA-M)** connected on RS485 communications line, working with ISO 1745 protocol.
- **Menu 55 –dLY-** Selection of a time delay applied to the response of the meter from the reception of a valid command.
- **Menu 56 –tIME-** Selection of activation or deactivation of " Print time and date" when used with printer **PRINTK180**. **(valid only for BETA-M version B-B)**

Detailed instructions for each menu are given on pages 14, 15, 16, 17, 18, 19.

ACCESS TO SERIAL OUTPUT PROGRAMMING

[14.1]

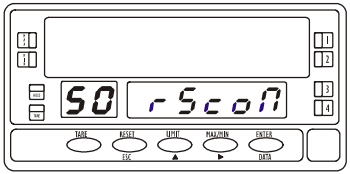

Press the ENTER key to pass from the run mode to the programming mode (indication – Pro – on secondary display) and press repeatedly the key ▶ until the meter's display the indication given in figure 14.1.
Press the ENTER key, to access to the first menu, or
▶ :to advance to the next programming module.
ESC : to return to the (-Pro-) stage.

MENU 51 –COMMUNICATION PROTOCOL

[14.2]

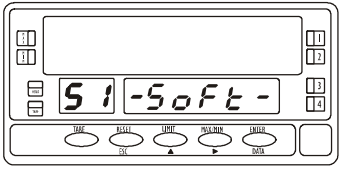

The figure 14.2 shows the indication corresponding to the entry stage of the communications protocol selection menu.
Press ENTER, to access to this menu, or

▶ :to pass to the next programming menu.
ESC : to return to the (-Pro-) stage.

[14.3]

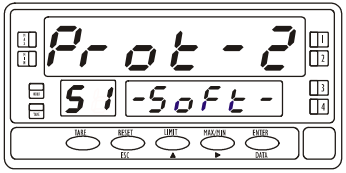

The display shows the previously selected type of protocol,
[Prot-1 = ASCII Protocol, Prot-2 = ISO 1745 Protocol, Prot-3 = MODBUS-RTU Protocol].
See pages 4, 5 y 6 for a detailed description of each protocol type
Press ▶ , if desired to change the option present on display and
ENTER , to save the choice and automatically return to the –Pro- stage
ESC : Returns the meter to the (- Pro -) stage without saving changes.

MENU 52 – TRANSMISIÓN RATE

[15.1]

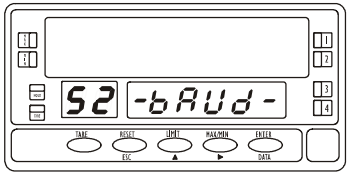

The figure 14.2 shows the indication corresponding to the entry stage of the transmission rate selection menu.

Press ENTER to access to this menu.

If the programming of this parameter has been already made and it is desired to pass to the following menu, press ▶ and go to figure 16.1, or

ESC : To return the meter to the programming access level –Pro-.

[15.2]

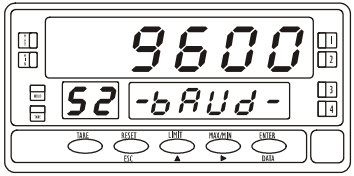

A press of ENTER made at previous sep makes the main display show the initially programmed transmission rate. The available options are 1200, 2400, 4800, 9600 y 19200 Baud.

Press repeatedly the ▶ key, until the desired option appears on the display and press ENTER , to validate the choice and automatically go to the –Pro- stage.

ESC : To return the meter to the (–Pro-) stage without data memory storage.

MENU 53 - ADDRESS

[16.1]

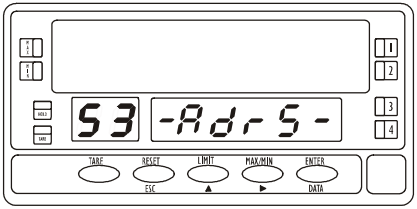

From the phase represented in figure 14.1, press ENTER key to access to the menu selection level and twice ▶ to bring the meter to the entry stage of the address programming menu 53 (see figure 16.1).
Press ENTER to get access to the programming of this parameter, or

▶ : to go to the next menu 54

ESC : to return to the programming access level (–Pro-)

[16.2]

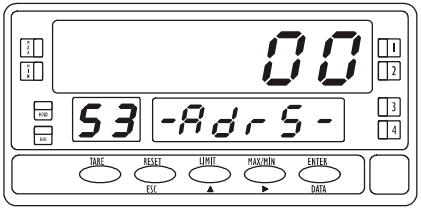

The main display shows a number of two digits corresponding to the previously programmed address, with the first digit in flash. If it is wanted to change the number, press repeatedly the ▲ key to make the flashing digit rotate from 0 to 9 and once it has taken the desired value, press ▶ key to advance to the next digit to be modified. Repeat this operation until the desired address appears on the display. It can be assigned addresses between 00 and 99.
Once the instrument's identification number has been composed on the display, press ENTER to store data in the memory and return to the –Pro- stage.

MENU 54 – VALIDATION OF THE "Send Configuration" COMMAND

[17.1]

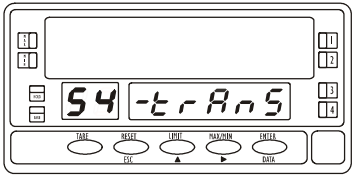

From the module 50 entry, press ENTER , to access to the programming menu and three times ▶ to bring to the meter to the entry stage of the TRANS menu figure 17.1 (auxiliary display shows 54 –trAnS).
This menu will allow to validate or inhibit a very peculiar function of the BETA_M models (**only in BETA-M**); the possibility to copy the whole programming of one instrument to an other connected to the RS485 line. Press ENTER ,to access this menu, or

▶ : to skip over this menu and advance to the next one.
ESC : to return to the programming access level **–Pro-**

[17.2]

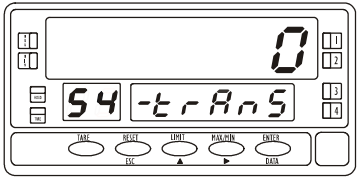

A flashing number appears on the main display (0 or 1 depending on previous selection).
The "**0**" means that the option to send the configuration is disabled, and the "**1**" means that is possible to use the option.
If the display shows the number corresponding to the desired option, press ESC or ENTER to go to the –Pro- stage. If not so, press ▶ to change the number and ENTER to save the entry and return to the –Pro- stage.

SEND COMMAND (Send Configuration)

To be able to use this command it is necessary to have selected the "1" option in the 54 –trAnS menu and the "Iso" option (corresponding to the communications protocol ISO 1745) in the menu 51 –SoFt.-
It is possible to program, one by one, all the instruments on the line. To access one of them, it is sufficient to give the BETA-M transmitter the same address as the BETA-M receiver (see page 16 for instructions about this item). After doing this operation , from the run mode , press ENTER to go to the level –Pro-.
Press TARE key and the auxiliary display will show **Send**
At this point, press ENTER to start sending the programming parameters to the receiver or press ESC to cancel. To continue with the rest of the instruments on the line, change the transmitter address by the one of the following BETA-M and repeat the operations described above [1. level –Pro- 2. KEY "TARE". 3 key "ENTER"].

MENU 55 – TIME DELAY SELECTION

[18.1]

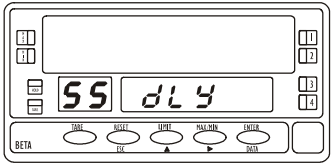

From the entry stage of the module 50 (see figure 14.1), press ENTER key to access to the programming menus and four times the ▶ key to bring the meter to the level shown in figure18.1, corresponding to the access stage of the **55 dLY** menu.
This menu permits to introduce a time delay that is applied to the time that takes the instrument to send a response from the moment it receives a command. The purpose of this delay is to avoid loss of information in case that the response occurs before the master device is ready to receive data. [This circumstance can appear in half-duplex links since the transmission and reception take place in the same direction]. Press ENTER to access to this menu, or

▶ : to skip over this menu and go to the 56 menu.

ESC : to return to the (-Pro-) stage.

[18.2]

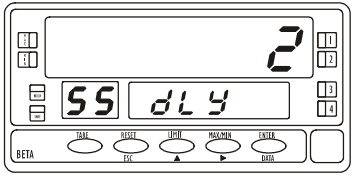

A stroke of ENTER key at previous sep, makes the display show a number (from 1 to 5 depending on previous programming) in flash [**1**= delay of 30 ms, **2** = delay of 60 ms, **3** = delay of 100 ms, **4** = delay of 300 ms, **5** = without delay (2 ms)].

Press repeatedly the ▶ key to scroll around the five numbers and, when display reads the desired option, press ENTER to save the entry and automatically go to the –Pro- stage

MENU 56 –"TIME" FUNCTION ACTIVATION (only on BETA-M)

[19.1]

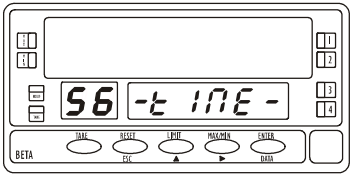

From the entry stage of the module 50 (see figure 14.1), press ENTER , to access to the programming menu and five times the ▶ key, to bring the instrument to the entry stage represented in figure 19.1, corresponding to the menu 56 **tiME**.
This menu allows to validate or inhibit to send a command to the DITEL printer PRINTK180, to print time and date.
Press ENTER to enter into this menu, or

▶ : to skip this menu and go to the 51 menu.

ESC : to return to the (-Pro-) stage.

[19.2]

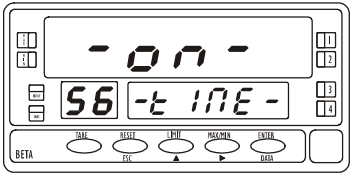

Pressing ENTER will appear on display the previously programming selected **-on-** o **-oFF-**.
Press the ▶ key, if desired to change the previous selection and press ENTER key to accept the change, and going automatically to "-Pro-".

ESC : to return to the (-Pro-) stage.

Note: This function, on BETA-D , KAPPA-M and new ALPHA's generation of 2003, is programmed at the moment of selecting a logical function related with Print function.

4. RS485 OPTION PROGRAMMING MODELS ALPHA'S AND GAMMA-M

CONFIGURATION DIAGRAM RS485 OUTPUT OPTION MODELS ALPHA AND GAMMA

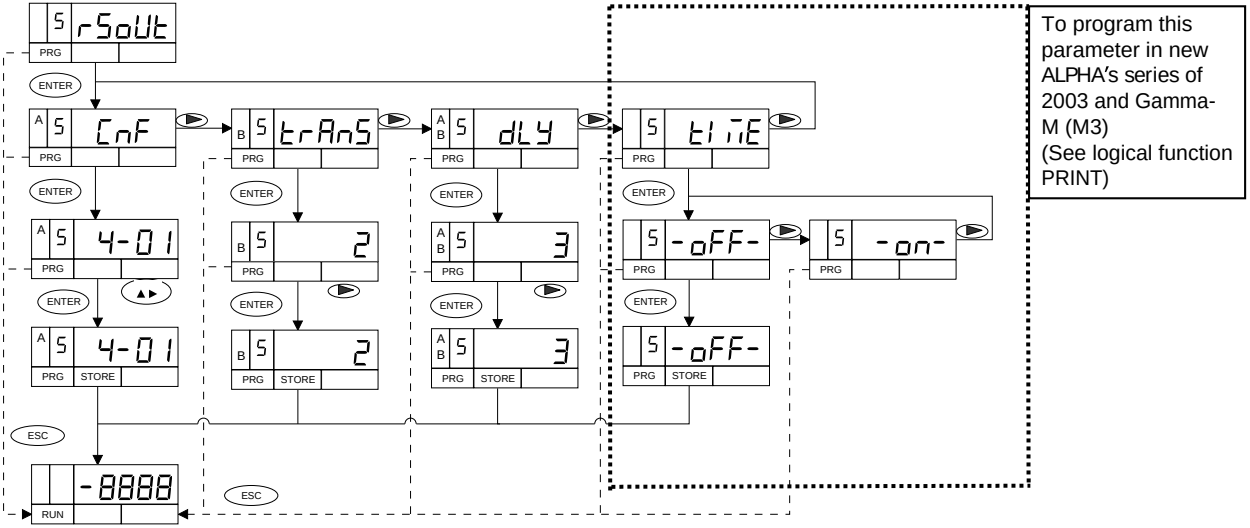

4.1 PROGRAMMING INSTRUCTIONS

The upper figurer represents the MODULE 5 for the serial output configuration, which is valid for models ALPHA's and GAMMA. The module is composed of 3 menus of independent access that allow configuring the following parameters:

- **Menu 5A CnF**: Configuration of the transmission rate and the instrument address.
- **Menu 5B trAnS**: Selection of 1, 2 or 3 protocol type.
- **Menu 5AB dLy**: Selection of a delay applicable to the response of the instrument from the reception of a request command.
- **Menu 5 TIME:** Selection of sending or not the command to the Ditel printer **PRINTK180** to print date and time.

Detailed instructions for each sep menu are given on pages 22, 23, 24 y 25.

ACCESS TO THE SERIAL OUTPUT PROGRAMMING

[22.1]

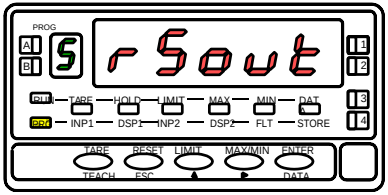

Press ENTER key to pass from the run mode to the programming mode (indication **–Pro-**, led **PROG**) and press repeatedly the ▶ key until the meters goes to the level shown in figure 22.1, corresponding to the entry stage of the serial output programming module. Press ENTER to get access to this module, or

▶ : to skip to the next programming module.

ESC : to return to the normal operation.

MENU 5A – OUTPUT CONFIGURATION

[22.2]

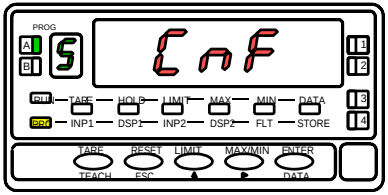

The figure 22.2 represents the access to the output configuration menu (display **5 CnF**, leds **A** and **PROG** actives) that allows to configure the baud rate and the instrument address number. Press ENTER to access in this menu, or

▶ : to skip over this menu and go to the next one.

ESC : to return to the normal operation

[22.3]

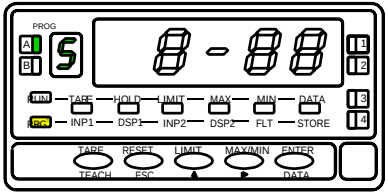

A press of ENTER key made at previous step makes the display show two numbers separated by a hyphen, the first of them in flash.
The leftmost number (1 digit) corresponds to the transmission rate:
[**1** = 1200, **2** = 2400, **3** = 4800, **4** = 9600 and **5** = 19200 Baud.]
The number at right (2 digits) corresponds to the instrument's address, that can be programmed between 00 and 99.
Press repeatedly the ▲ key to change the value of flashing digit and press ▶ key to go to the next digit to be programmed. Repeat these operations until to reads the desired parameter and press ENTER key to save changes in memory and automatically go to the normal operation.

MENU 5B – SELECTION OF THE COMMUNICATION PROTOCOL

[23.1]

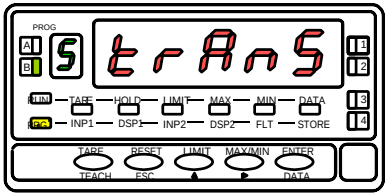

From the entry stage of the module 5 (fig 22.1), press ENTER to access to the programming menu and ▶ to bring the meter to the phase represented in figure 23.1 (indication **5 trAnS**, leds **B** and **PROG** activated). In this menu it is possible to select the communication's protocol between instrument and the D.T.E. Press ENTER to access to this menu, or

▶ : to skip over this menu and advance to the next one.

ESC : to return to the normal operation

[23.2]

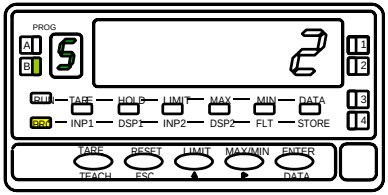

The display shows a flashing number (1 , 2 or 3 depending on previous selection) corresponding to the present communications protocol [**1** = **ASCII** protocol **2** = **ISO1745** protocol and **3** = **ModBus-RTU** protocol].
If display's value corresponds to the desired option, press ENTER or ESC to return to the run mode without making changes. If not so, press the ▶ key to change the number and ENTER to save the choice and automatically go to the normal operation.

MENU 5AB – TIME DELAY SELECTION

[24.1]

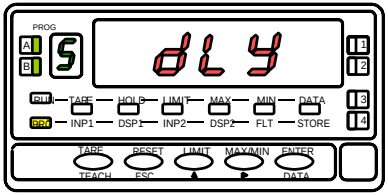

From the entry stage of the module 5 press ENTER key to access to the programming menus and twice the ▶ key to bring the meter to the level shown in figure 24.1 (indication **5 dLy**, leds **A, B** y **PROG** activated)
This menu permits to introduce a time delay that is applied to the time that takes the instrument to send a response from the moment it receives a command. [This circumstances can appear in half-duplex links since the transmission and the reception take place in the same line] . Press ENTER to access this menu, or

▶ : to skip over this menu and go to the 5A menu.

ESC : to return to the normal operation.

[24.2]

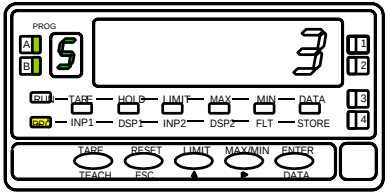

A stroke of ENTER at previous step makes the display show a number (from 1 to 4 depending on previous programming) in flash [**1** = 30ms delay, **2** = 60ms delay, **3** = 100ms delay, **4** = 300ms delay]. Press repeatedly the ▶ key to scroll around the four number and, when the display reads the desired option, press ENTER to save the entry and automatically go to the run mode.
The new generation of ALPHA's from 2003 allows programming number **5** = 0 ms delay(2 ms max.)

MENU 5 – SELECTION FUNCTION PRINT TIME AND DATE (valid only with PRINTK180)

[25.1]

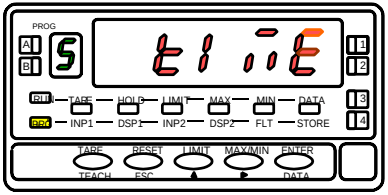

From the entry stage of the module 5 press ENTER key to access to the programming menus and twice the ▶ key to bring the meter to the level shown in figure 25.1 (indication **5 TIME**) This menu allows selecting if print, or not the date and time after printing data from the instrument when using a **PRINTK180**. Press ENTER to access to this menu, or

▶ : to skip over this menu or go to 5A menu.

ESC : to return to the normal operation.

This function does not appear in the new ALPHA's generation from 2003. The function is available when selecting the corresponding logical function Print.

[25.2]

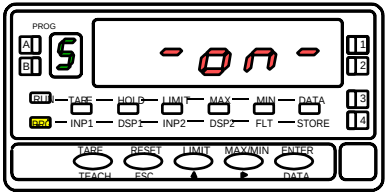

A stroke of ENTER at previous step makes the display show the option (depending on previous programming) in flash. Press repeatedly the ▶ key until display shows **on** (will print date and time) or **oFF** (does not print date and time) and press ENTER to store the selected option into the memory and automatically go to the run mode.

A.1 Commands TABLE for KOSMOS type: ALPHA-C, ALPHA-P, ALPHA-T, ALPHA-D, BETA-M, BETA-D, GAMMA-M and KAPPA-M

Command		Function	Type of function	Type of Instrument								
Protocol ASCII	Protocol ISO1745			ALPHA-C	ALPHA-P	ALPHA-T	ALPHA-L	ALPHA-D	BETA-M	BETA-D	GAMMA-M	KAPPA-M
D	ØD	Transmission display value	Trans	•	•	•	•	•	•	•	•	•
T	ØT	Transmission TARA value(offset in thermometer, preset in ALPHA-D)	Trans	•	•	•	•	•	•		•	•
T	ØT	Transmission Total value	Trans							•		
P	ØP	Transmission Peak value	Trans	•	•	•	•	•	•		•	•
V	ØV	Transmission Valley	Trans	•	•	•	•	•	•		•	•
Y	ØY	Transmission Peak-Peak	Trans								•	
Z	ØZ	Transmission Total value	Trans						•			
X	ØX	Transmission number batch	Trans					•	•			
L1	L1	Transmission setpoint 1 value	Trans	•	•	•	•	•	•	•	•	•
L2	L2	Transmission setpoint 2 value	Trans	•	•	•	•	•	•	•	•	•
L3	L3	Transmission setpoint 3 value	Trans	•	•	•	•	•	•	•	•	•
L4	L4	Transmission setpoint 4 value	Trans	•	•	•	•	•	•	•	•	•
M1	M1	Modify setpoint 1 value	Modif	•	•	•	•	•	•	•	•	•
M2	M2	Modify setpoint 2 value	Modif	•	•	•	•	•	•	•	•	•
M3	M3	Modify setpoint 3 value	Modif	•	•	•	•	•	•	•	•	•
M4	M4	Modify setpoint 4 value	Modif	•	•	•	•	•	•	•	•	•
I	ØI	Transmission active logical inputs	Trans	•	•	•	•	•	•	•	•	•
F	ØF	Transmission multiplier factor	Trans					•				
C	ØC	Transmission input function type	Trans					•				•

Follows in next page

Follows from previous page

Command		Function	Type of function	Type of instrument								
Protocol ASCII	Protocol ISO1745			ALPHA-C	ALPHA-P	ALPHA-T	ALPHA-L	ALPHA-D	BETA-M	BETA-D	GAMMA-M	KAPPA-M
t	Øt	Make tare (or preset in Beta-D)	order	•	•		•	•	•	•	•	•
r	Ør	Reset tare (or preset in Alpha-D/ Beta-D)	order	•	•		•	•	•	•	•	•
p	Øp	Reset peak	order	•	•	•	•	•	•		•	•
v	Øv	Reset valley	order	•	•	•	•	•	•		•	•
y	Øy	Reset peak-peak	order								•	
z	Øz	Reset total and batch (reset counter in Alpha-D)	order					•	•			•
z	Øz	Reset 1 variables group	order							•		
n	Øn	Reset setpoints latch	order	•	•	•	•		•	•	•	•
h	Øh	Hold + reset 1	order							•		
x	Øx	Reset batch counter	order					•				
	TT	Transmission type of instrument	Trans	•	•	•	•	•	•	•	•	•

To use ModBus protocol, please consult specific manual **MODBUS** available on www.ditel.es

The instruments are warranted against defective materials and workmanship for a period of three years from date of delivery.

If a product appears to have a defect or fails during the normal use within the warranty period, please contact the distributor from which you purchased the product.

This warranty does not apply to defects resulting from action of the buyer such as mishandling or improper interfacing.

The liability under this warranty shall extend only to the repair of the instrument. No responsibility is assumed by the manufacturer for any damage which may result from its use.

All the DITEL products benefit from an unlimited and unconditional warranty of THREE (3) years from the date of their purchase. Now you can extend this period of warranty up to FIVE (5) years from the product commissioning, only by fulfilling a form.

Fill out the form in our website:
http://www.ditel.es/warranty

INSTRUCTIONS FOR THE RECYCLING

This electronic instrument is covered by the **2002/96/CE** European Directive so, it is properly marked with the crossed-out wheeled bin symbol that makes reference to the selective collection for electrical and electronic equipment which indicates that at the end of its lifetime, the final user cannot dispose of it as unsorted municipal waste.

In order to protect the environment and in agreement with the European legislation regarding waste of electrical and electronic equipments from products put on the market after 13 August 2005, the user can give it back, without any cost, to the place where it was acquired to proceed to its controlled treatment and recycling.

DISEÑOS Y TECNOLOGIA, S.A.
Polígono Industrial Les Guixeres
C/ Xarol 8 C
08915 BADALONA-SPAIN
Tel : +34 - 93 339 47 58
Fax : +34 - 93 490 31 45
E-mail : dtl@ditel.es

www.ditel.es